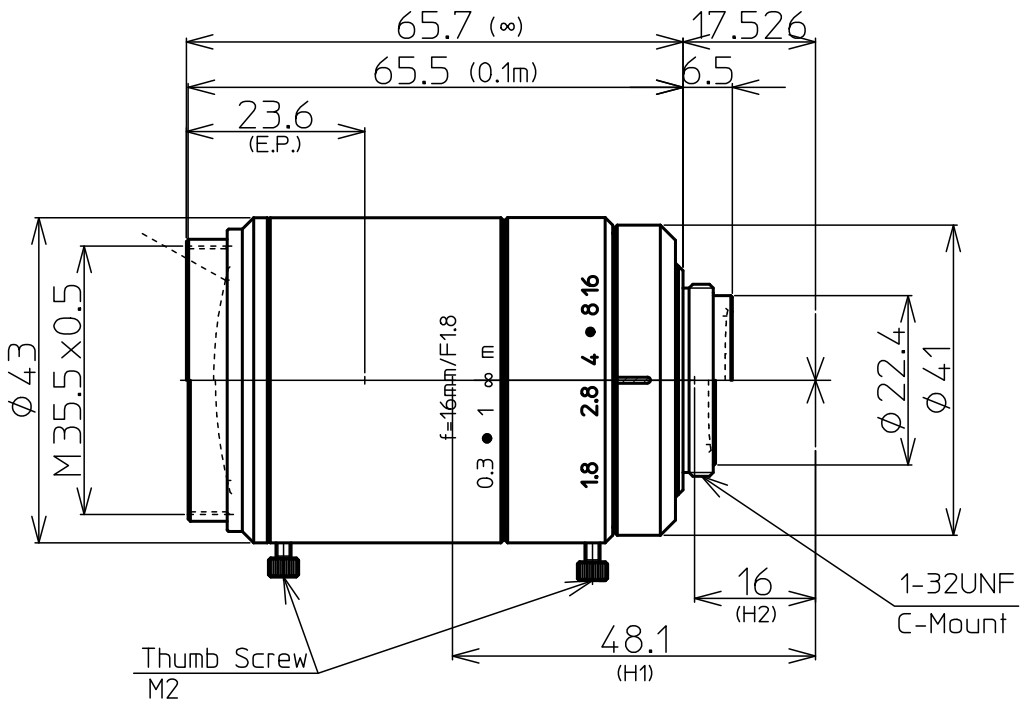

1.1" 1.8/16mm C		1.1"	1"	2/3"
FOCAL LENGTH		f=16mm		
F-NUMBER		F=1.8-16		
PICTURE SIZE		10.6×14.1mm	9.6×12.8mm	6.6×8.8mm
ANGLE OF VIEW (∞)	VER. ANGLE	36.7°	33.4°	23.3°
	HOR. ANGLE	48.0°	43.6°	30.8°
	DIA. ANGLE	58.3°	53.1°	37.9°
DISTORTION (TV)		-0.4%	-0.4%	-0.3%
FIELD OF VIEW (MINIMUM FOCUS DISTANCE)	VER.	77mm	70mm	48mm
	HOR.	102mm	93mm	64mm
	DIA.	127mm	116mm	80mm
MINIMUM FOCUS DISTANCE		0.1m		
FLANGE BACK		17.526mm in air		
BACK FOCUS		11.9mm in air		
FILTER SCREW SIZE		M35.5×0.5		
FRONT/REAR EFFECTIVE DIA.		FRONT φ26.5mm	REAR φ17.0mm	
MOUNT		C-MOUNT		
EXIT PUPIL		-58.9mm		
TEMPERATURE RANGE		-10~+50°C		
STORAGE TEMPERATURE RANGE		-20~+60°C		
RESOLUTION CENTER/CORNER		CENTER 160lp/mm	CORNER 100lp/mm	
WEIGHT		200g		

NOTE:Specifications and availability are subject to change without notice

注）本仕様については、予告なしに変更する場合があります。

		尺度 1/1	工場番号	LM16FC
		機種名 1.1" F1.8 f=16mm		
2017.09.15	作成年月日	機種番 LM16FC 外観図		